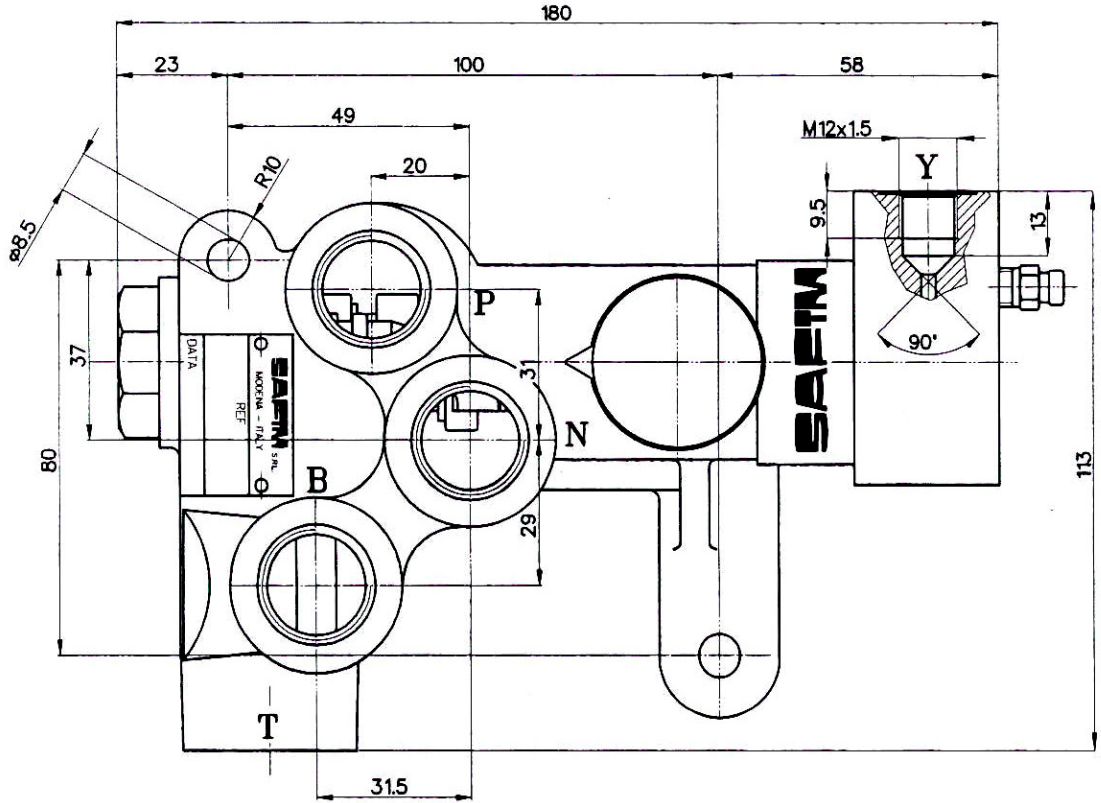

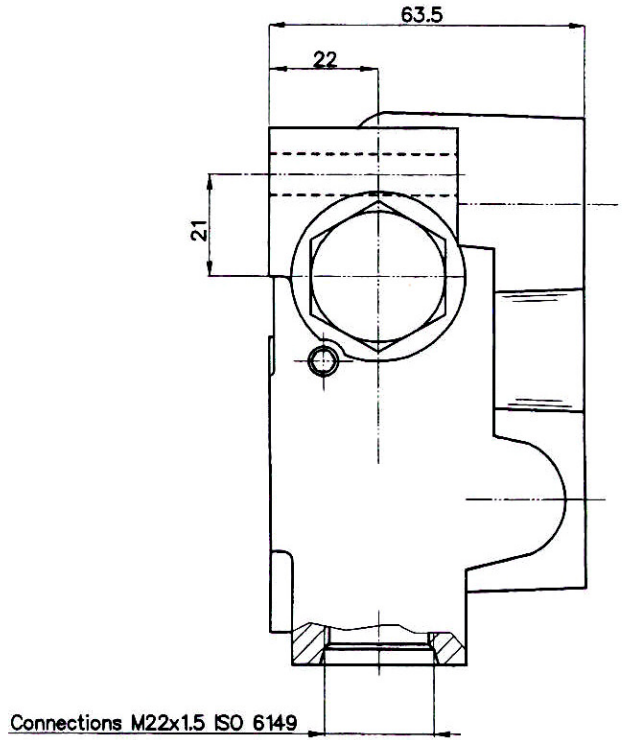

Hydraulic system

P	Pump
N	Tractor hydraulic system
B	Trailer brake connection
T	Tank
Y	Tractor brake pressure pilot signal

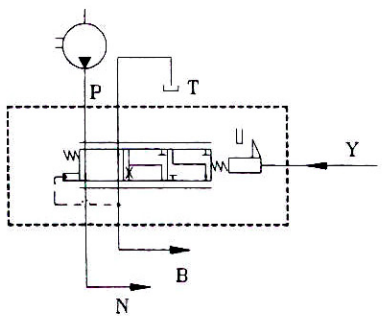

Technical characteristics of valve	Feed flow 20–80 Lit/1'
	Trailer brake pressure max in B 130 $^{+5}_{0}$ bar
	Max operating pressure in N 180 bar
	Working temperature −20'+100 °C
	Feed at P with hydraulic oil
	Pilot signal at Y with mneral oil or brake fluid